BULK SOLIDS FEEDING

Blow-Through Rotary Valves
RVS

Drop-Through Rotary Valves
RVC

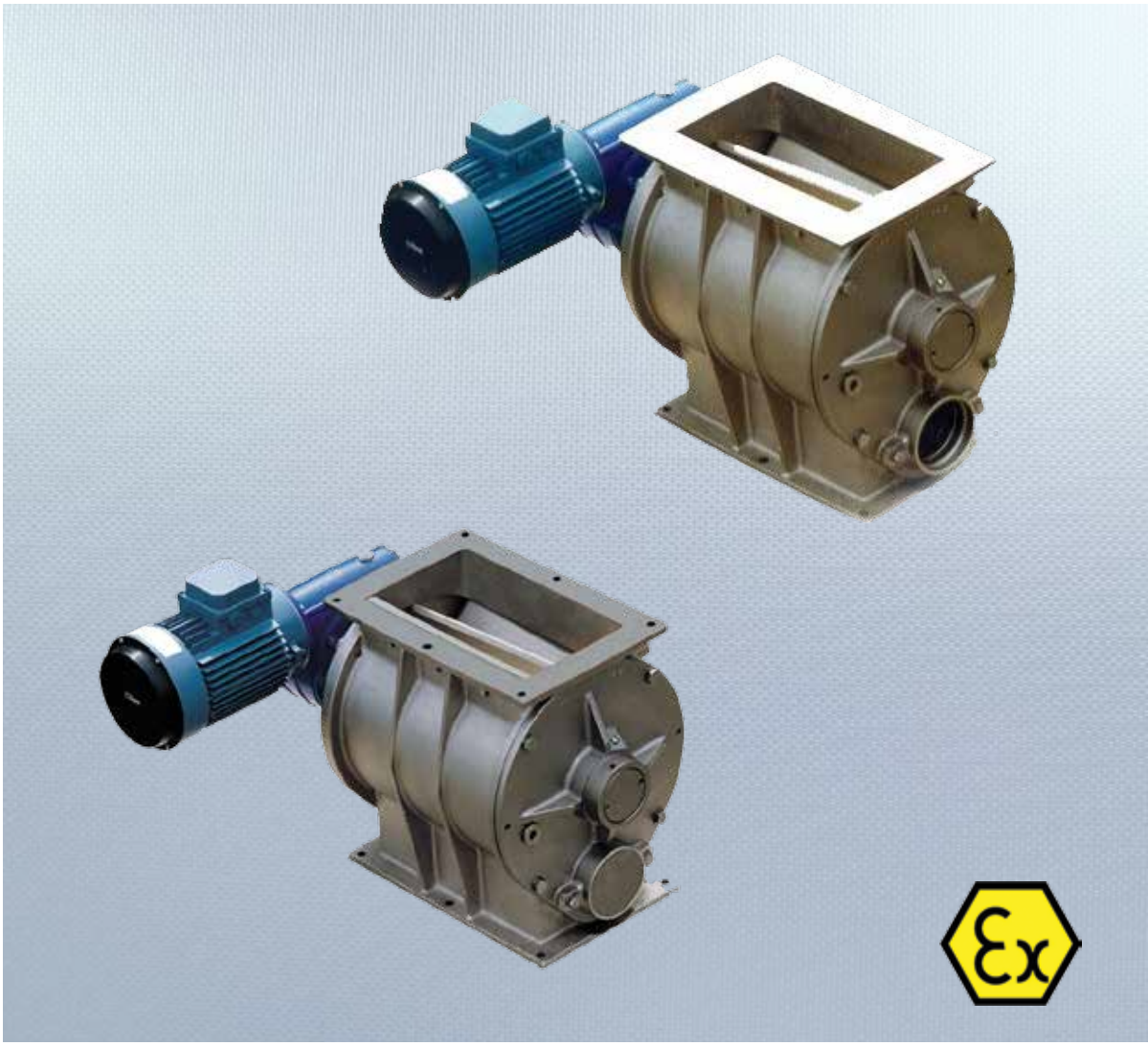

WAMGROUP

TOREX®

Blow-Through Rotary Valves RVS

Drop-Through Rotary Valves RVC

HIGH FILLING EFFICIENCY AND PRECISE METERING IN GRAVITY FEEDING AND PNEUMATIC CONVEYING OF POWDERS AND GRANULES

RVS Blow-Through Rotary Valves have two compartments at a time of the continuously turning rotor filled up with material through the inlet at the top. After less then half a turn the material is conveyed into an air stream of a pneumatic conveying pipe passing through the bottom of the rotary valve.

With RVC Drop-Through Rotary Valves, which have a similar design, the material falls out through the bottom outlet by gravity into a container, a conveyor or pneumatic conveying system.

Features

- Capacity: 5 – 10 – 15 – 20 – 38 – 78 litres per revolution (0.17 – 0.35 – 0.52-0.7 – 1.23 – 2.82 cu ft/rev)
- Working temperature: from -40 °C up to 220°C
- Working pressure: from – 0.5 bar up to 0.8 bar
- Material: cast iron or 304 stainless steel

ATEX Certification

RVS – RVC... X

ATEX 20/22 Certified

CE 0948 Ex II 1D/3D c T135°C

Cert.No.EX5 07 01 61456 002

ATEX Rotary Valves

ATEX rotary valves are designed and tested for use in potentially explosive zones classified as ZONE 22 or non-classified zones and with process atmospheres (inside the valve) classified as ZONE 20 in accordance with Directive 94/9/EC and 1999/92/EC.

Usage Limits

Ambient temperature: from -10°C to + 40°C
Process temperature (material): from – 20°C to + 60°C
Atmospheric pressure: from 0.8 to 1.1 bar
Maximum rotor speed: 30 rpm
Minimum ignition energy: mie > 3 mJ

RVC...E

ATEX 20/22 Certified

CE 0948 Ex II 1D/3D c T135°C

CE 0948 Ex D St2

EC Type Cert.FTZÚ14 ATEX 0053X
EN 15089:2009 - Explosion Protection Device

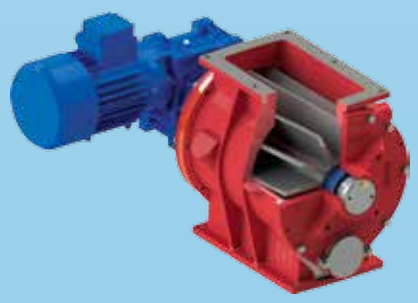

Flame Proof and Explosion Protection Device

The RVC…E explosion protection device are ATEX certified for zone 20/22 and are used as a protective and dust explosion-flame proof system up to 6 bar.

Suitable to be used under silo, hoppers, dust filters, cyclones, product separators, pneumatic conveying and dosing systems within the following conditions:

Ambient temperature: from -10°C to + 40°C
Process temperature (material): from – 20°C to + 60°C
Atmospheric Pressure: from 0.8 to 1.1 bar
Maximum rotor speed: 30 rpm
Minimum Ignition Energy: mie > 3 mJ
Maximum pressure differential between top and bottom flange: 0.7 bar (recommended)
Maximum Explosion Pressure: 6 bar

Features

- Suitable for application in hazardous area
- Stop flame and sparks passage from one flange to the other in both directions.
- Provide the maximum overpressure up to 6 bar.
- ATEX zone 20/22 certification included
- Thanks to the 10 rotor blades (RVC05) and 12 rotor blades (RVC 10-15-20-35) execution is suited for protective system and explosion barrier

RVS Blow-Through Rotary Valves

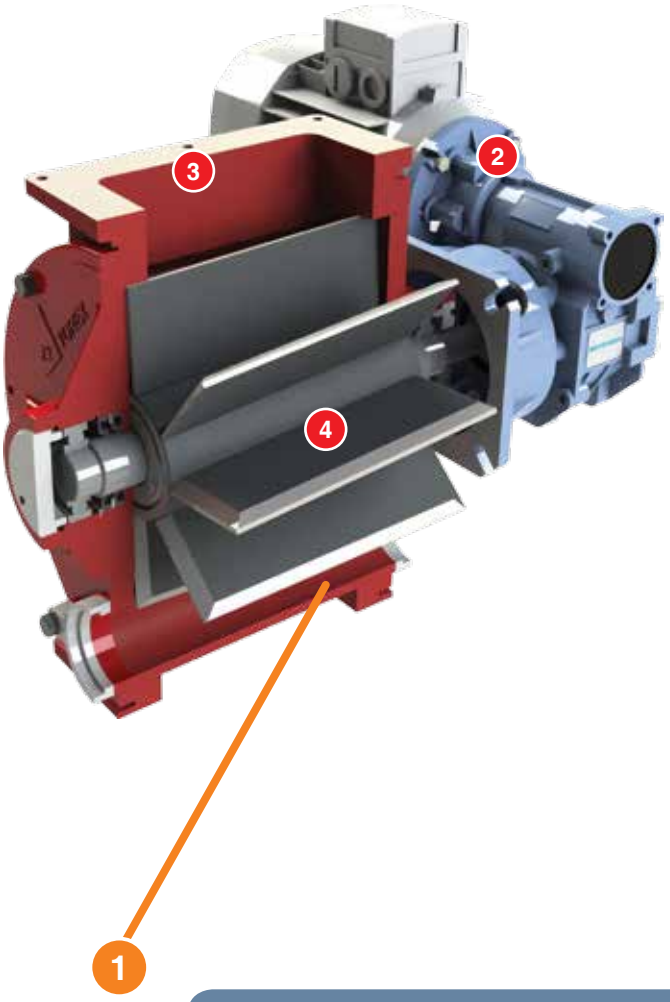

2 Drive Unit

Bare Shaft

Direct Drive (20-30 rpm)

Direct Pre-Torque Gea
Motor (10 rpm)

3 Casing

Internally Chrome-Plated
Used for abrasive materials

Completely Nickel-Plated
Used for corrosive materials or as a substitute of stainless steel for food applications if accepted.
Rotor and end flanges are completely nickel-plated too

Internally Teflon®-Co
Used for sticky materi
Rotor and end flanges
Teflon®-coated too.

1 Bottom Outlet

Streamlined entry and discharge of air conveyed through valve

- **Introduces high pressure conveying air through the valve casing and rotor pockets, ensuring high efficiency throughput with a low pressure drop**
- **Reduced overall height**
- **Pipe connections included bolted on both sides of the end plates**

4 Rotor

Standard Version with
Chamfered Rotor Blades

Accessories

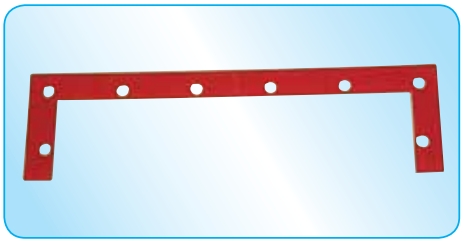

Vulkollan®

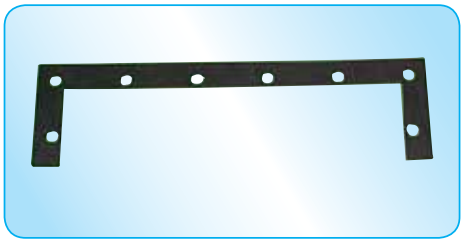

Viton®

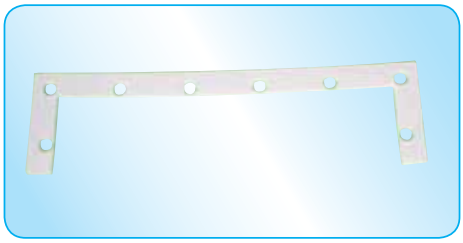

Teflon®

ar

Mechanical Variable Speed Drive (from 4 to 20 rpm)

Chain Transmission (10-20-30 rpm)

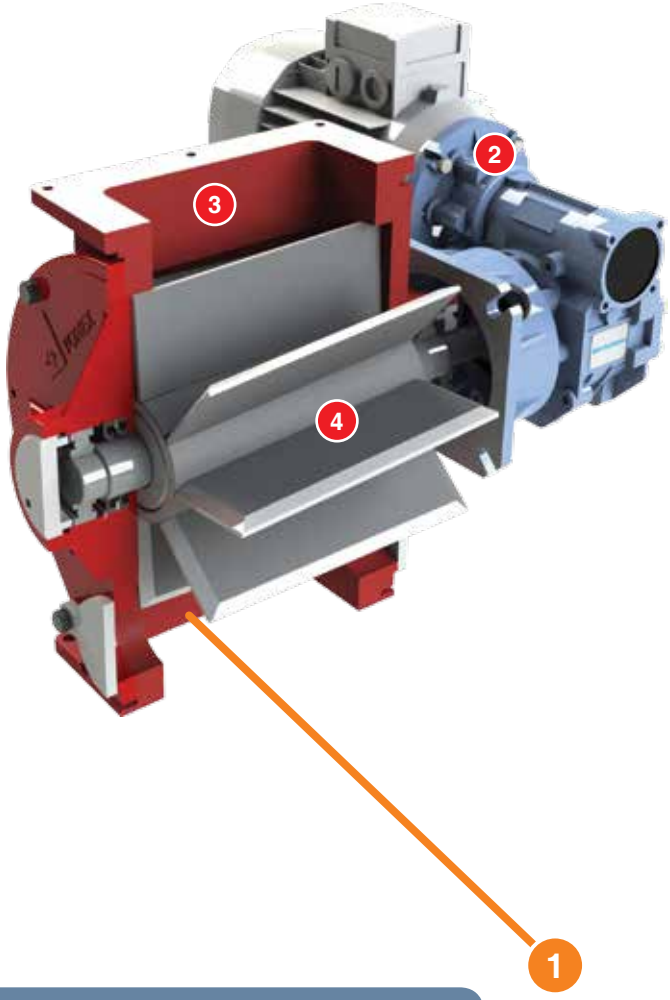

oated
als.
are

Tungsten Carbide Anti-wear treatment
Used for erosive and abrasive wear applications

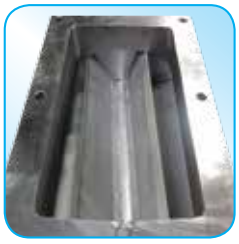

Completely 304 Stainless Steel Cast
Used for food applications. Rotor and end flanges are manufactured from 304 stainless steel too.

Lateral air venting bores as standard
Used for:
- extracting excess air from rotor pockets
- decreasing air pressure inside the casing
- increasing throughput

Rotor with Replaceable Tips

1 Bottom Outlet

Large open bottom outlet to freely discharge material under gravity flow
- **Suitable for both gravity and pneumatic conveying system**
- **In case of installation in pneumatic conveying system, a drop box custom made can be fitted to suit all pipe diameters (not provided by TOREX®)**
- **Identical inlet/outlet flange dimensions enable easy connection**

Air-Purged Seals

External bearing
- packing gland seals
- suitable for temperature up to 220°C
- suitable for extremely fine powders

Rotation Indicator

Scraper

Applications

Benefits

- ✓ RVS with rectangular inlet flange and two lateral pipe connections on bottom outlet;
- ✓ RVC with rectangular inlet/outlet flange;
- ✓ Open rotor with bevelled edges as standard (except RVC/S 80);
- ✓ Sturdy compact structure;
- ✓ Drive unit mounted on rotor shaft without further bearing assembly or coupling;
- ✓ Easy access to internal mechanical parts;
- ✓ Various materials and treatments available depending on material handled;
- ✓ ATEX 20/22 version available.

WAM® FLITECH® MAP® EXTRAC® SPECO® TOREX® OLI® RONCUZZI® TECNO CM

TOREX®

UNI EN ISO 9001 Certified Company

www.wamgroup.com